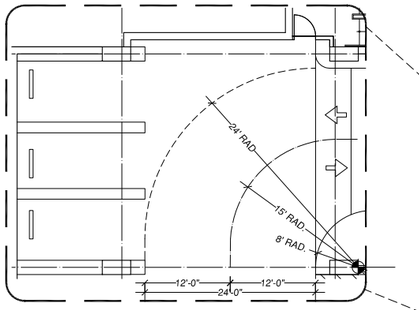

TYPICAL NORTH CORNER

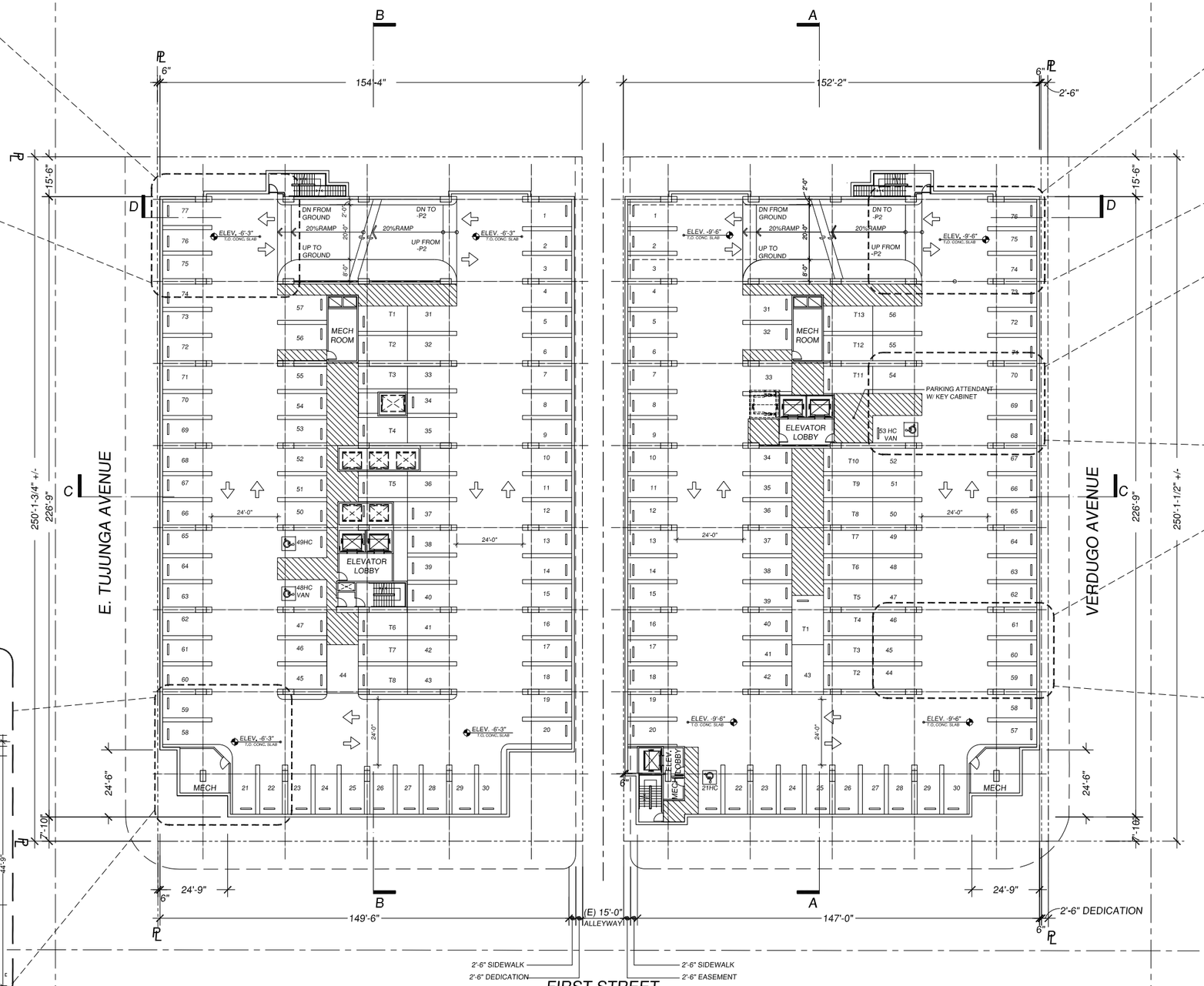

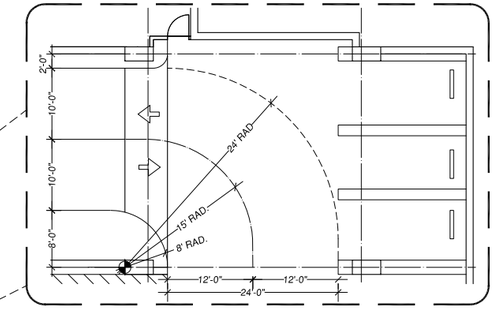

TYPICAL RAMP TURN

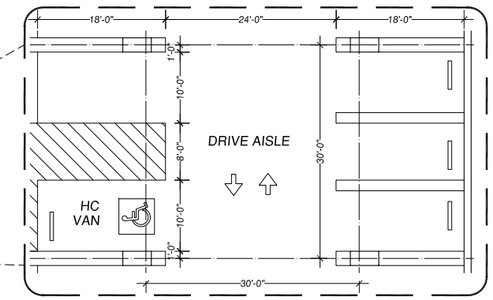

HC PARKING

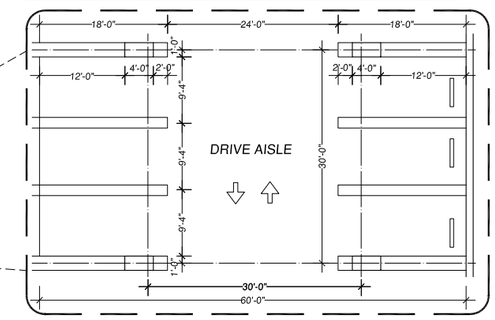

TYPICAL PARKING BAY

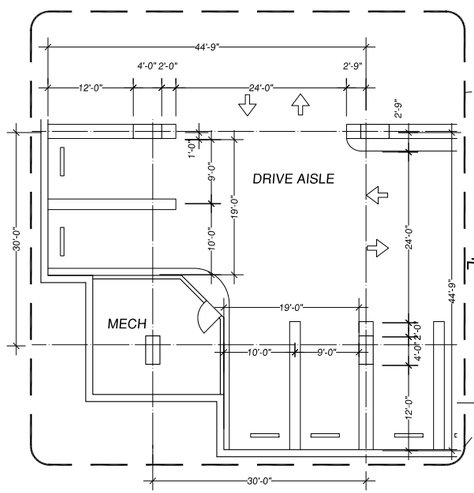

TYPICAL SOUTH CORNER

PARKING

BELOW GRADE PARKING

	STND.	C.	HC	TOTAL
PARKING -1	83		2	85
PARKING -2	87		2	89
PARKING -3	90		2	92
SUBTOTAL				266

ABOVE GRADE PARKING

	STND.	C.	HC	TOTAL
PARKING +1	82		2	84
PARKING +2	86		2	88
SUBTOTAL				172

TOTAL 438

PARKING COUNT

BELOW GRADE PARKING

	STANDARD	HC	TOTAL
PARKING -1	87	2	89
PARKING -2	87	2	89
PARKING -3	90	2	92
SUBTOTAL			270

ABOVE GRADE PARKING

	STND.	C.	HC	TOTAL
PARKING +1	80	3	2	85
PARKING +2	86		2	88
SUBTOTAL				173

TOTAL 443*

(* FOR PHASE 1 ADD 28 SURFACE SPACES)

*SEE PARKING MANAGEMENT DIAGRAMS (A25 - A27) FOR ASSIGNED PARKING, VAN / CAR POOL, EV, ETC.

DCA
DANIEL CHUDNOVSKY, A.I.A. ARCHITECTS, INC.
2566 S. OVERLAND AVENUE, SUITE 640, LOS ANGELES, CA 90064
DCAARCHITECT.COM
COPYRIGHT © 2016

the Premier on First

CUSUMANO REAL ESTATE GROUP

* OFFICE • PARKING LEVEL - 1 • RESIDENTIAL

A-4 DESIGN REVIEW SUBMITTAL 01/06/17 A-4

0 10 20 40 80

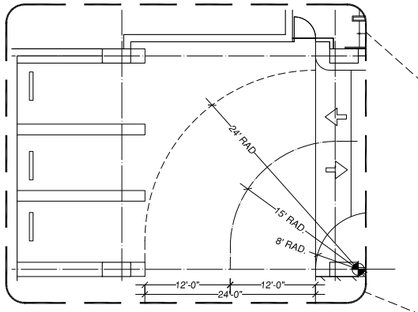

TYPICAL NORTH CORNER

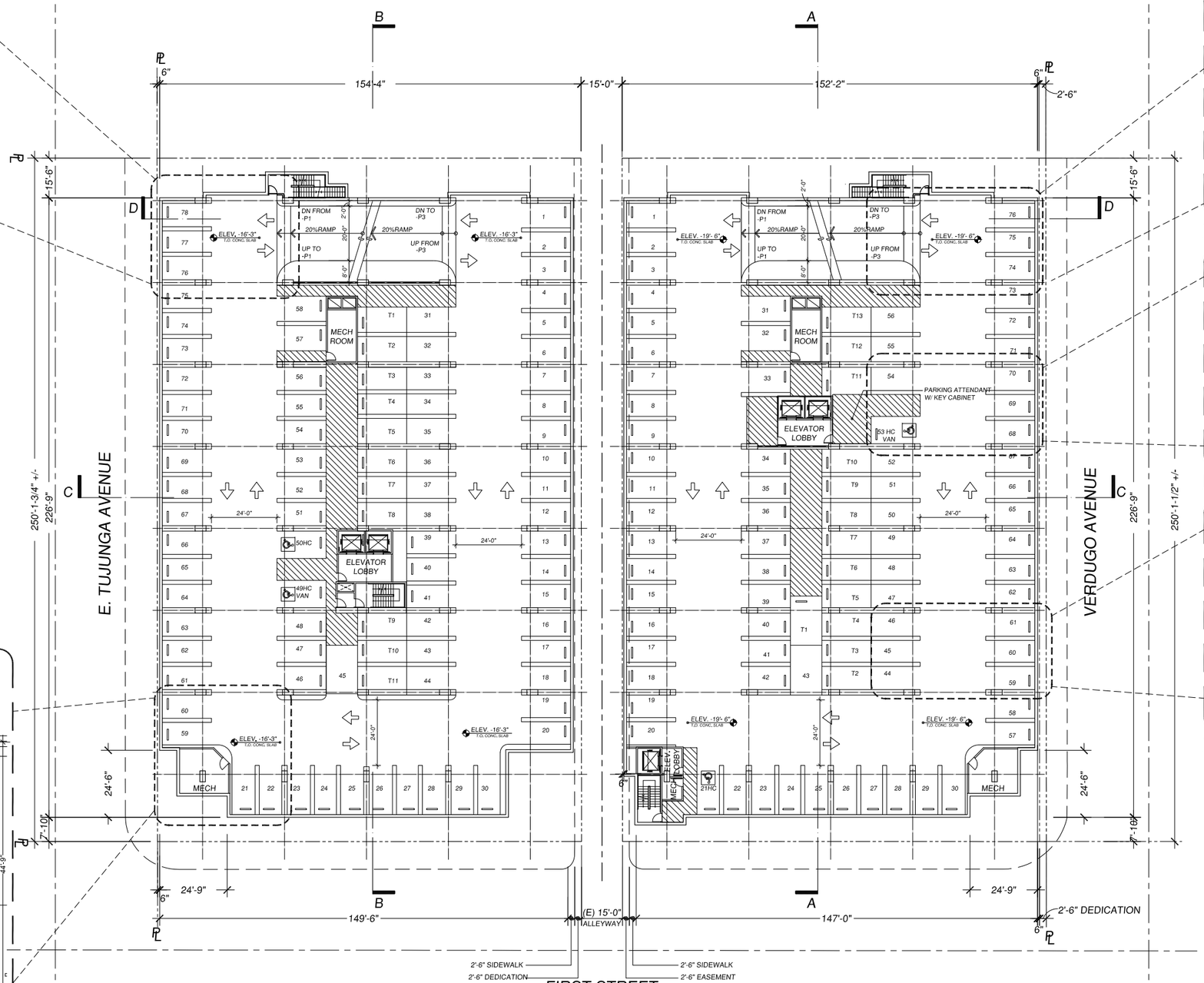

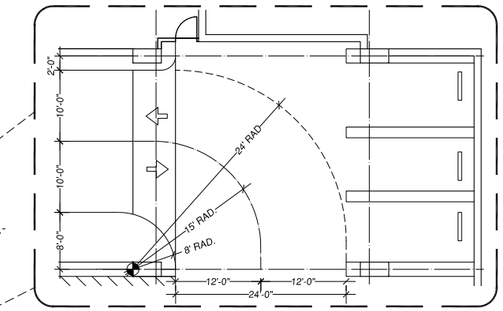

TYPICAL RAMP TURN

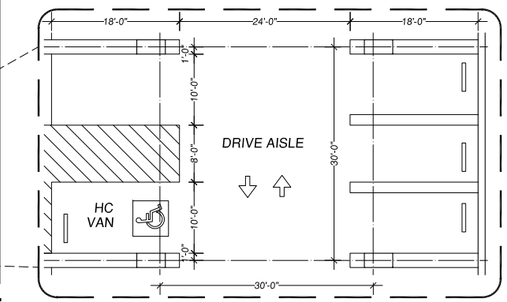

HC PARKING

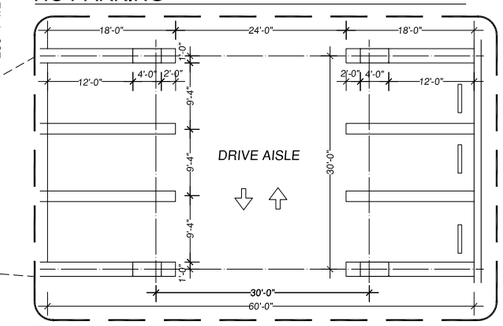

TYPICAL PARKING BAY

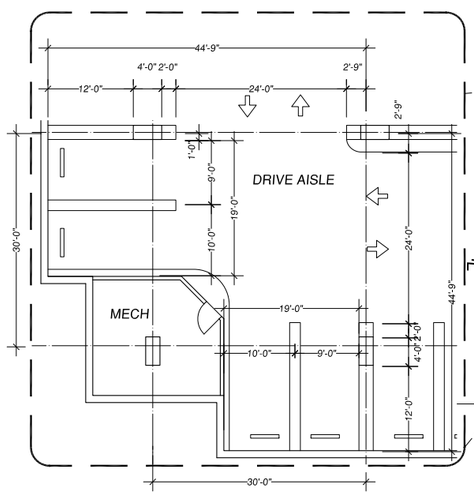

TYPICAL SOUTH CORNER

PARKING

BELOW GRADE PARKING

	STND.	C.	HC	TOTAL
PARKING -1	83		2	85
PARKING -2	87		2	89
PARKING -3	90		2	92
SUBTOTAL				266

ABOVE GRADE PARKING

	STND.	C.	HC	TOTAL
PARKING +1	82		2	84
PARKING +2	86		2	88
SUBTOTAL				172
TOTAL				438

PARKING COUNT

BELOW GRADE PARKING

	STANDARD	HC	TOTAL
PARKING -1	87	2	89
PARKING -2	87	2	89
PARKING -3	90	2	92
SUBTOTAL			270

ABOVE GRADE PARKING

	STND.	C.	HC	TOTAL
PARKING +1	80	3	2	85
PARKING +2	86		2	88
SUBTOTAL				173
TOTAL				443*

(* FOR PHASE 1 ADD 28 SURFACE SPACES)

*SEE PARKING MANAGEMENT DIAGRAMS (A25 - A27) FOR ASSIGNED PARKING, VAN / CAR POOL, EV, ETC.

DCA
DANIEL CHUDNOVSKY, A.I.A. ARCHITECTS, INC.
2566 S. OVERLAND AVENUE, SUITE 640, LOS ANGELES, CA 90064
DCAARCHITECT.COM
COPYRIGHT © 2016

N

* OFFICE • PARKING LEVEL - 2 • RESIDENTIAL

A-5 DESIGN REVIEW SUBMITTAL 01/06/17 A-5

0 10 20 40 80

CUSUMANO REAL ESTATE GROUP

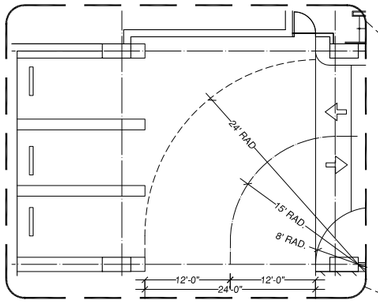

TYPICAL NORTH CORNER

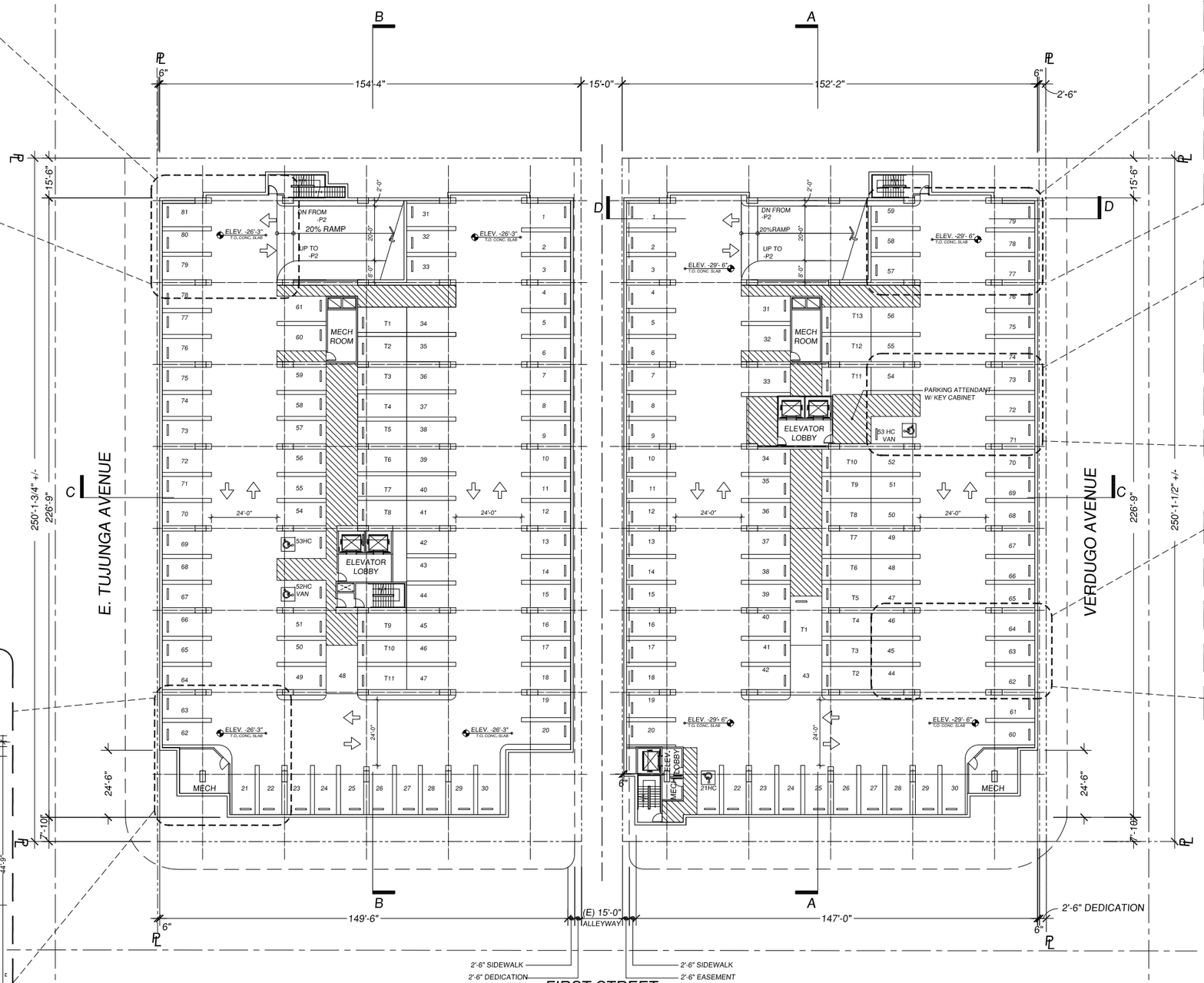

*SEE PARKING MANAGEMENT DIAGRAMS (A25 - A27) FOR ASSIGNED PARKING, VAN / CAR POOL, EV, ETC.

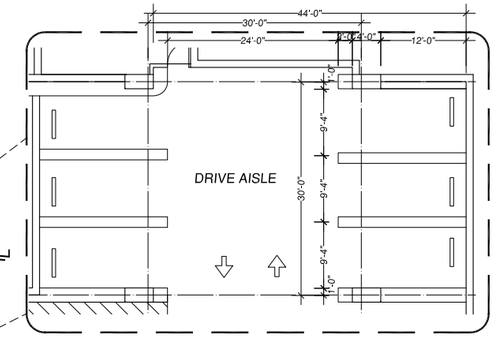

TYPICAL NORTH CORNER

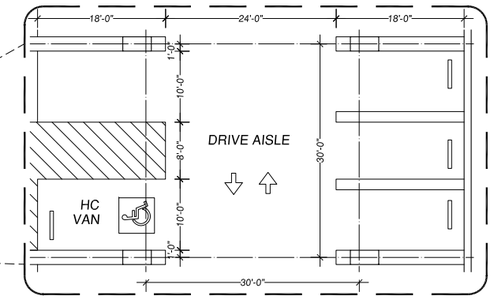

HC PARKING

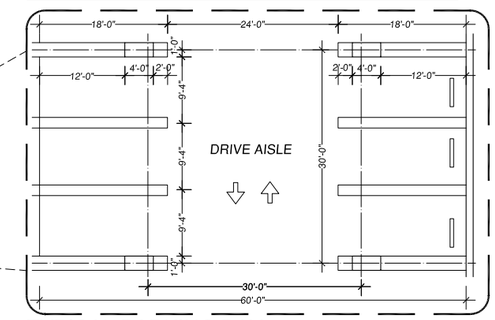

TYPICAL PARKING BAY

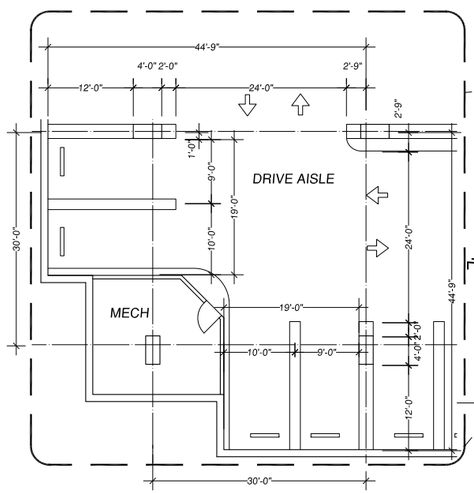

TYPICAL SOUTH CORNER

PARKING

BELOW GRADE PARKING

	STND.	C.	HC	TOTAL
PARKING -1	83		2	85
PARKING -2	87		2	89
PARKING -3	90		2	92
SUBTOTAL				266

ABOVE GRADE PARKING

	STND.	C.	HC	TOTAL
PARKING +1	82		2	84
PARKING +2	86		2	88
SUBTOTAL				172
TOTAL				438

PARKING COUNT

BELOW GRADE PARKING

	STANDARD	HC	TOTAL
PARKING -1	87	2	89
PARKING -2	87	2	89
PARKING -3	90	2	92
SUBTOTAL			270

ABOVE GRADE PARKING

	STND.	C.	HC	TOTAL
PARKING +1	80	3	2	85
PARKING +2	86		2	88
SUBTOTAL				173
TOTAL				443*

(* FOR PHASE 1 ADD 28 SURFACE SPACES)

DCA
DANIEL CHUDNOVSKY, A.I.A. ARCHITECTS, INC.
2566 S. OVERLAND AVENUE, SUITE 640, LOS ANGELES, CA 90064
DCAARCHITECT.COM
COPYRIGHT © 2016

N

the Premier on First

CUSUMANO REAL ESTATE GROUP

PARKING LEVEL -3

DESIGN REVIEW SUBMITTAL 01/06/17

0 10 20 40 80

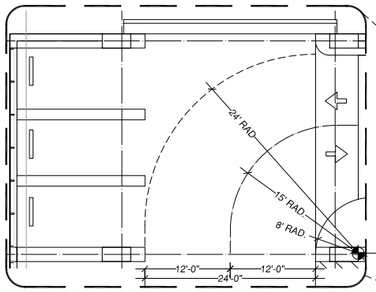

TYPICAL NORTH CORNER

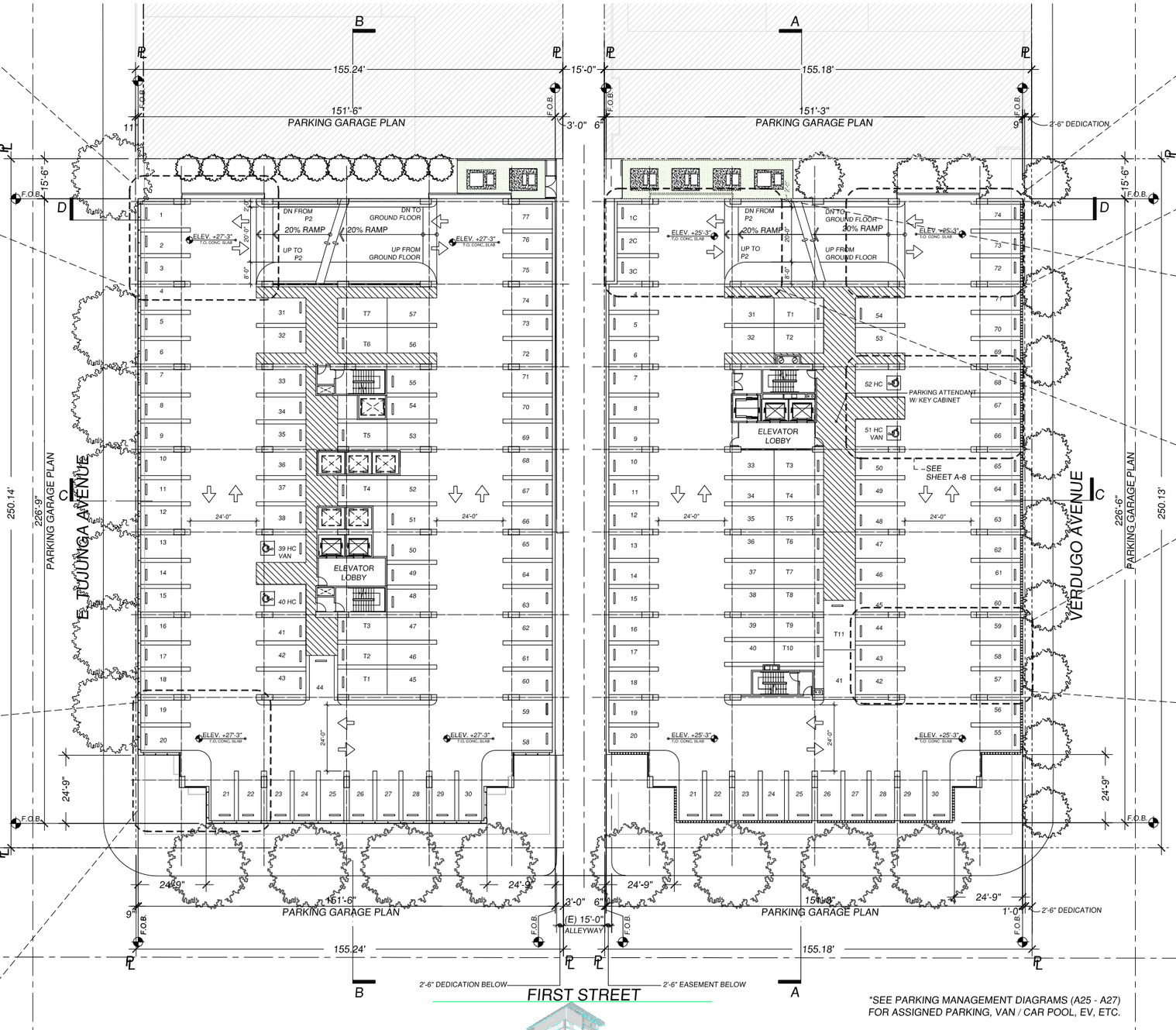

*SEE PARKING MANAGEMENT DIAGRAMS (A25 - A27) FOR ASSIGNED PARKING, VAN / CAR POOL, EV, ETC.

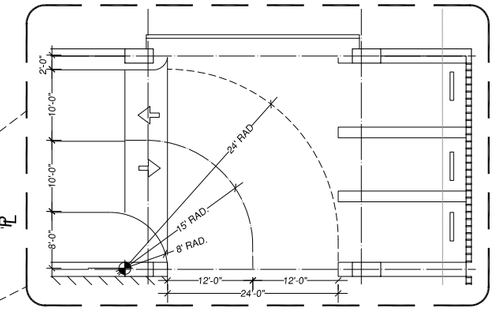

TYPICAL RAMP TURN

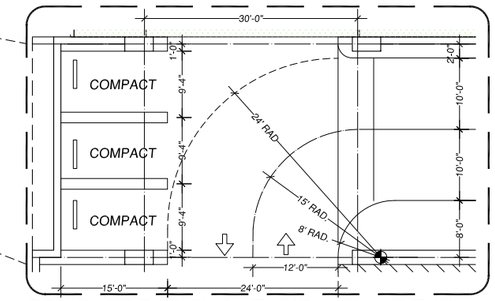

COMPACT PARKING / TYPICAL RAMP TURN

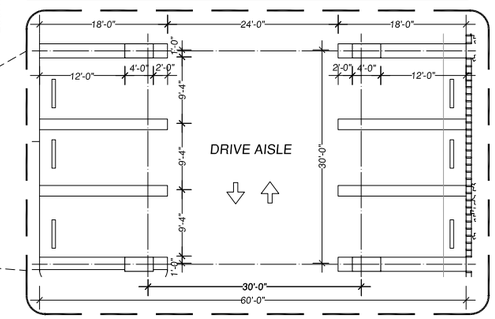

TYPICAL PARKING BAY

PARKING

BELOW GRADE PARKING

	STND.	C.	HC	TOTAL
PARKING -1	83		2	85
PARKING -2	87		2	89
PARKING -3	90		2	92
SUBTOTAL				266

ABOVE GRADE PARKING

	STND.	C.	HC	TOTAL
PARKING +1	82		2	84
PARKING +2	86		2	88
SUBTOTAL				172

TOTAL 438

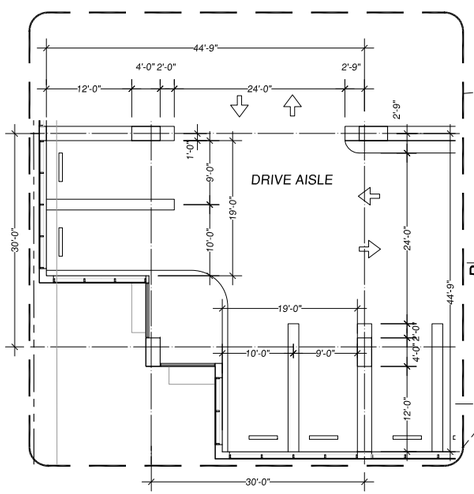

TYPICAL SOUTH CORNER

PARKING COUNT

BELOW GRADE PARKING

	STANDARD	HC	TOTAL
PARKING -1	87	2	89
PARKING -2	87	2	89
PARKING -3	90	2	92
SUBTOTAL			270

ABOVE GRADE PARKING

	STND.	C.	HC	TOTAL
PARKING +1	80	3	2	85
PARKING +2	86		2	88
SUBTOTAL				173

TOTAL 443*

(* FOR PHASE 1 ADD 28 SURFACE SPACES)

DCA
DANIEL CHUDNOVSKY, A.I.A. ARCHITECTS, INC.
2566 S. OVERLAND AVENUE, SUITE 640, LOS ANGELES, CA 90064
DCAARCHITECT.COM
COPYRIGHT © 2016

N

the Premier on First

* OFFICE • PARKING LEVEL +1 • RESIDENTIAL

A-7 DESIGN REVIEW SUBMITTAL 01/06/17 A-7

0 10 20 40 80

CUSUMANO REAL ESTATE GROUP

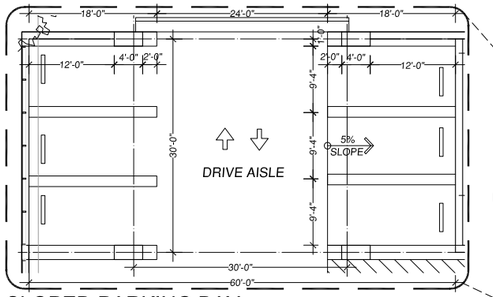

SLOPED PARKING BAY

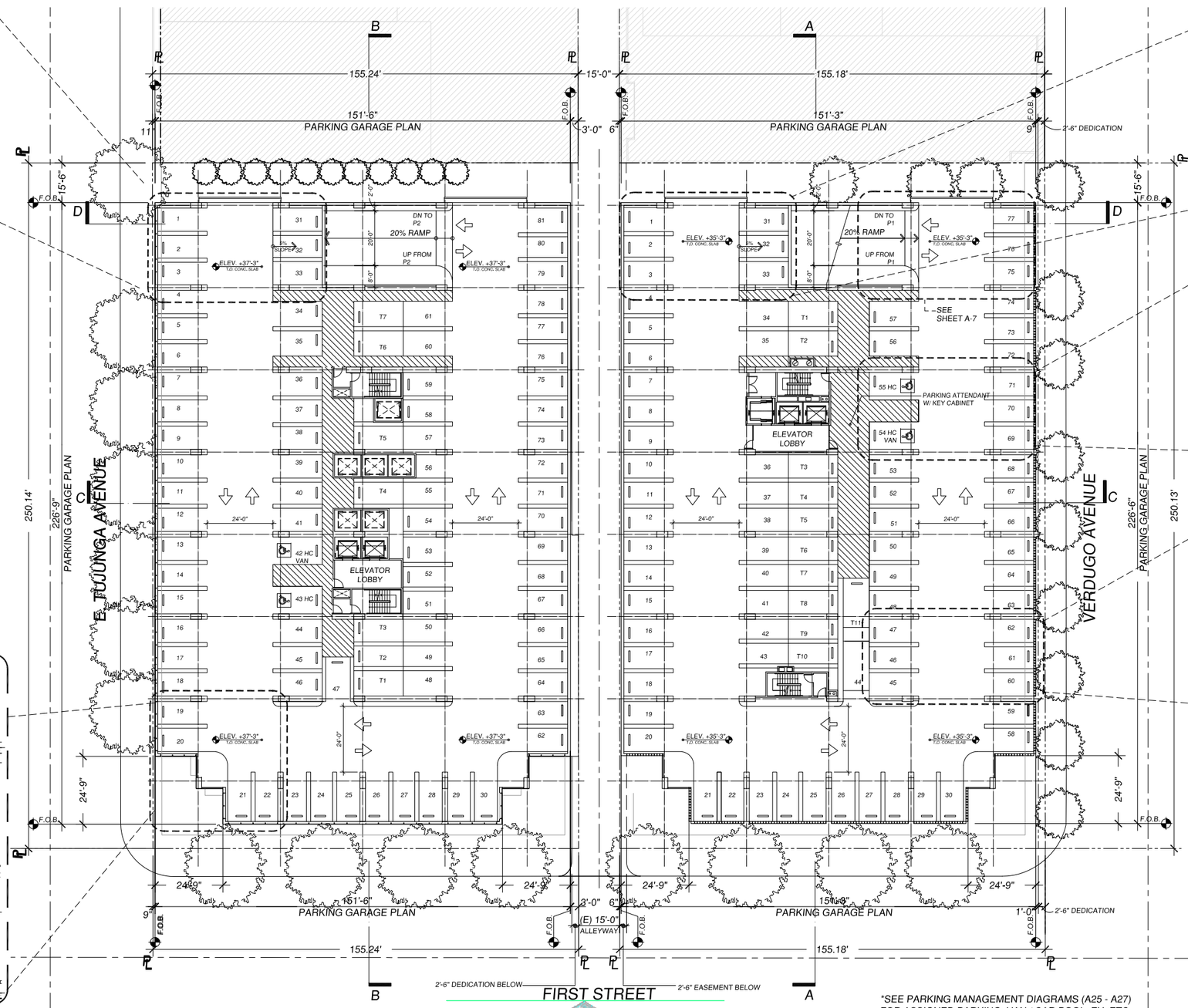

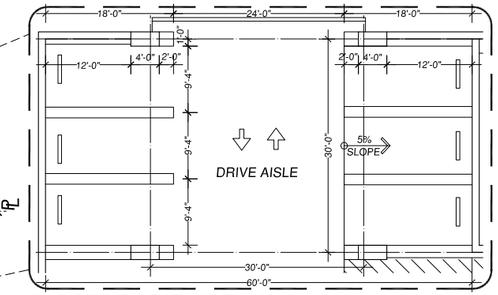

SLOPED PARKING BAY

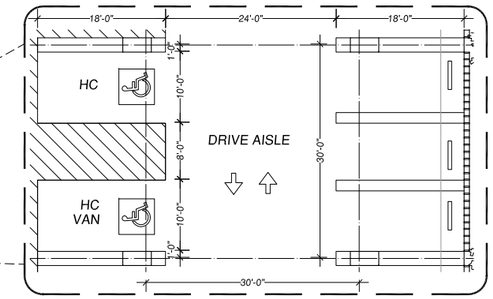

HC PARKING

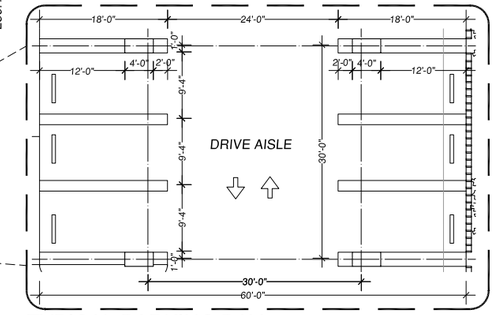

TYPICAL PARKING BAY

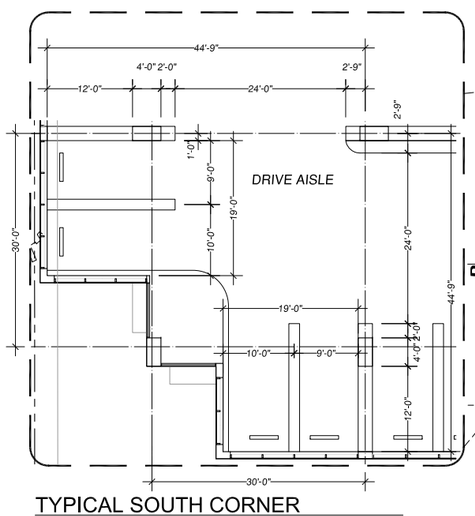

TYPICAL SOUTH CORNER

PARKING

BELOW GRADE PARKING

	STND.	C.	HC	TOTAL
PARKING -1	83		2	85
PARKING -2	87		2	89
PARKING -3	90		2	92
SUBTOTAL				266

ABOVE GRADE PARKING

	STND.	C.	HC	TOTAL
PARKING +1	82		2	84
PARKING +2	86		2	88
SUBTOTAL				172

TOTAL 438

PARKING COUNT

BELOW GRADE PARKING

	STANDARD	HC	TOTAL
PARKING -1	87	2	89
PARKING -2	87	2	89
PARKING -3	90	2	92
SUBTOTAL			270

ABOVE GRADE PARKING

	STND.	C.	HC	TOTAL
PARKING +1	80	3	2	85
PARKING +2	86		2	88
SUBTOTAL				173

TOTAL 443*

(* FOR PHASE 1 ADD 28 SURFACE SPACES)

*SEE PARKING MANAGEMENT DIAGRAMS (A25 - A27) FOR ASSIGNED PARKING, VAN / CAR POOL, EV, ETC.

DCA
DANIEL CHUDNOVSKY, A.I.A. ARCHITECTS, INC.
2566 S. OVERLAND AVENUE, SUITE 640, LOS ANGELES, CA 90064
DCAARCHITECT.COM
COPYRIGHT © 2016

the Premier on First

CUSUMANO REAL ESTATE GROUP

N

0 10 20 40 80

* OFFICE • PARKING LEVEL +2 • RESIDENTIAL

A-8 DESIGN REVIEW SUBMITTAL 01/06/17 A-8

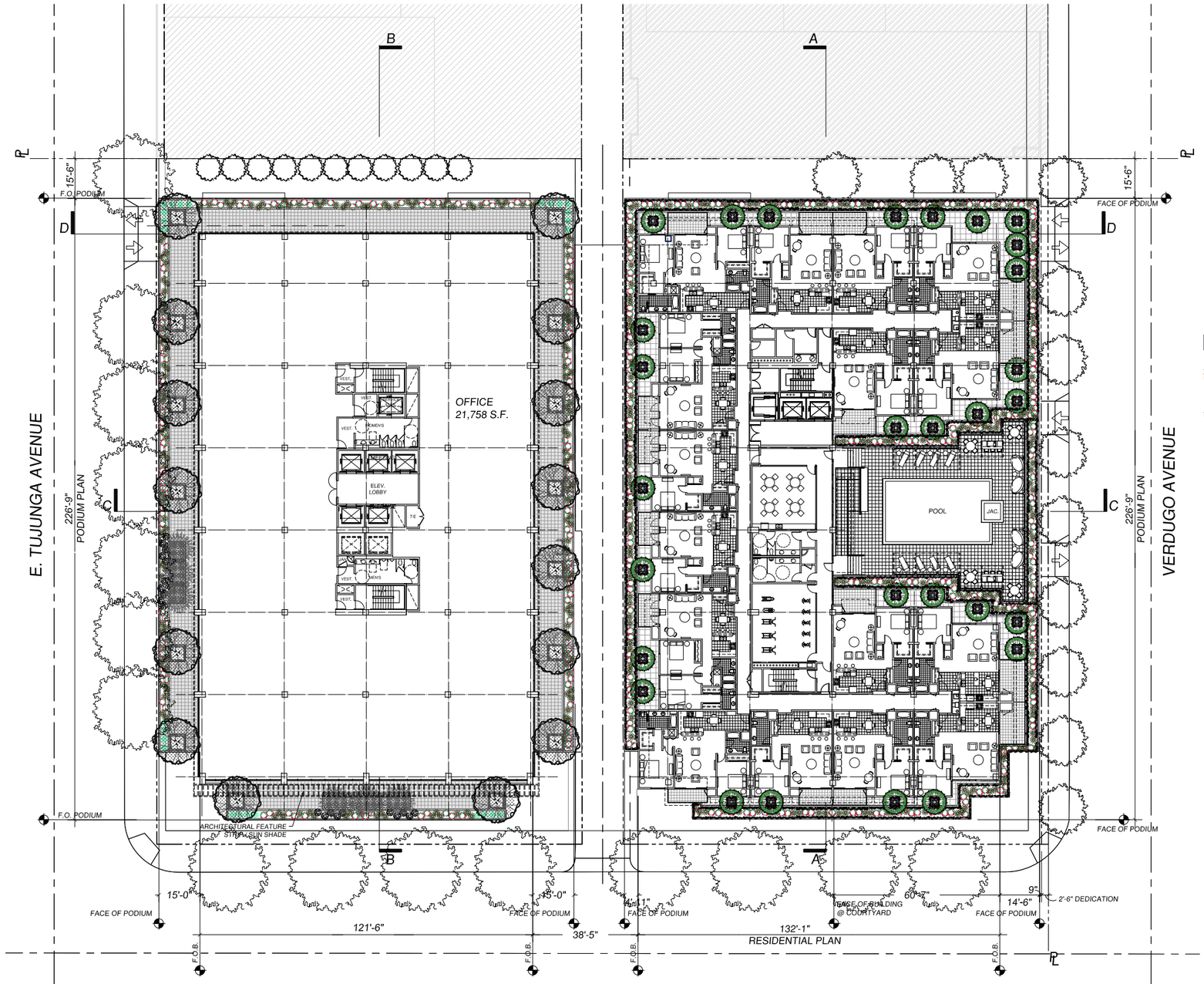

OFFICE SPACE

PODIUM LEVEL 1	21,758 SF
SUBTOTAL	21,758 SF
2ND-5TH LEVELS	
(*SF. PER LEVEL)	*21,950 SF
SUBTOTAL	87,800 SF
6TH LEVEL	16,151 SF
SUBTOTAL	16,151 SF
7TH-8TH LEVELS	
(*SF. PER LEVEL)	*16,151 SF
SUBTOTAL	32,302 SF
TOTAL	158,011 SF

PRIVATE & COMMON AREA OPEN SPACE

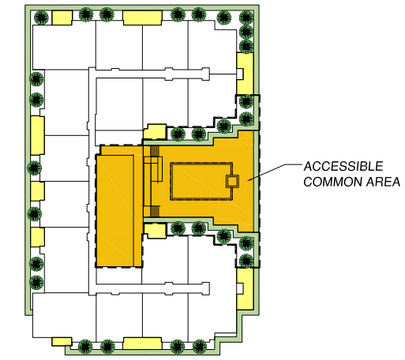

PRIVATE OPEN SPACE:	1,933 SF
16 UNITS / 1,933 SF =	121 SF PER UNIT
ACCESSIBLE COMMON AREA / OPEN SPACE: (* INCLUDES 2,322 SF OF INTERIOR COMMON AREA)	*8,081 SF *
* LANDSCAPE AREA 25.5%:	2,057 SF
ACCESSIBLE LANDSCAPE AREA:	4,228 SF

RESIDENTIAL UNITS

PODIUM LEVEL (18 UNITS)	area	number
1 BEDRM	(830sf - 880sf)	12
2 BEDRM	(1,140sf - 1,150sf)	4
TOTAL		16

TYPICAL LEVEL (2ND - 5TH) (18 UNITS / LEVEL)		
1 BEDRM	(830sf - 880sf)	48
1 BEDRM + OFFICE	(1,100sf -1,150sf)	8
2 BEDRM	(1,140sf -1,150sf)	16
TOTAL		72

6TH LEVEL (14 UNITS)		
1 BEDRM	(830sf - 880sf)	8
1 BEDRM + OFFICE	(1,100sf -1,150sf)	2
2 BEDRM	(1,140sf -1,150sf)	4
TOTAL		14

7TH - 9TH LEVEL (14 UNITS / LEVEL)		
1 BEDRM	(830sf - 880sf)	24
1 BEDRM + OFFICE	(1,100sf -1,150sf)	6
2 BEDRM	(1,140sf -1,150sf)	12
TOTAL		42

PENTHOUSE LEVEL		
1 - LOFT BEDRM	(1,702sf)	2
1 - LOFT BEDRM + OFFICE	(1,800sf -1,860sf)	2
2 BEDRM + LOFT BEDRM	(2,690sf - 3,060sf)	4
2 BEDRM + LOFT OFFICE	(2,125sf)	2
TOTAL		10

GRAND TOTAL	154

DCA
DANIEL CHUDNOVSKY, A.I.A. ARCHITECTS, INC.

2566 S. OVERLAND AVENUE, SUITE 640, LOS ANGELES, CA 90064
DCAARCHITECT.COM
COPYRIGHT © 2016

N

the Premier on First

* OFFICE • (1st) PODIUM LEVEL (1st) • RESIDENTIAL

A-9 DESIGN REVIEW SUBMITTAL 01/06/17 A-9

0 10 20 40 80

CUSUMANO REAL ESTATE GROUP

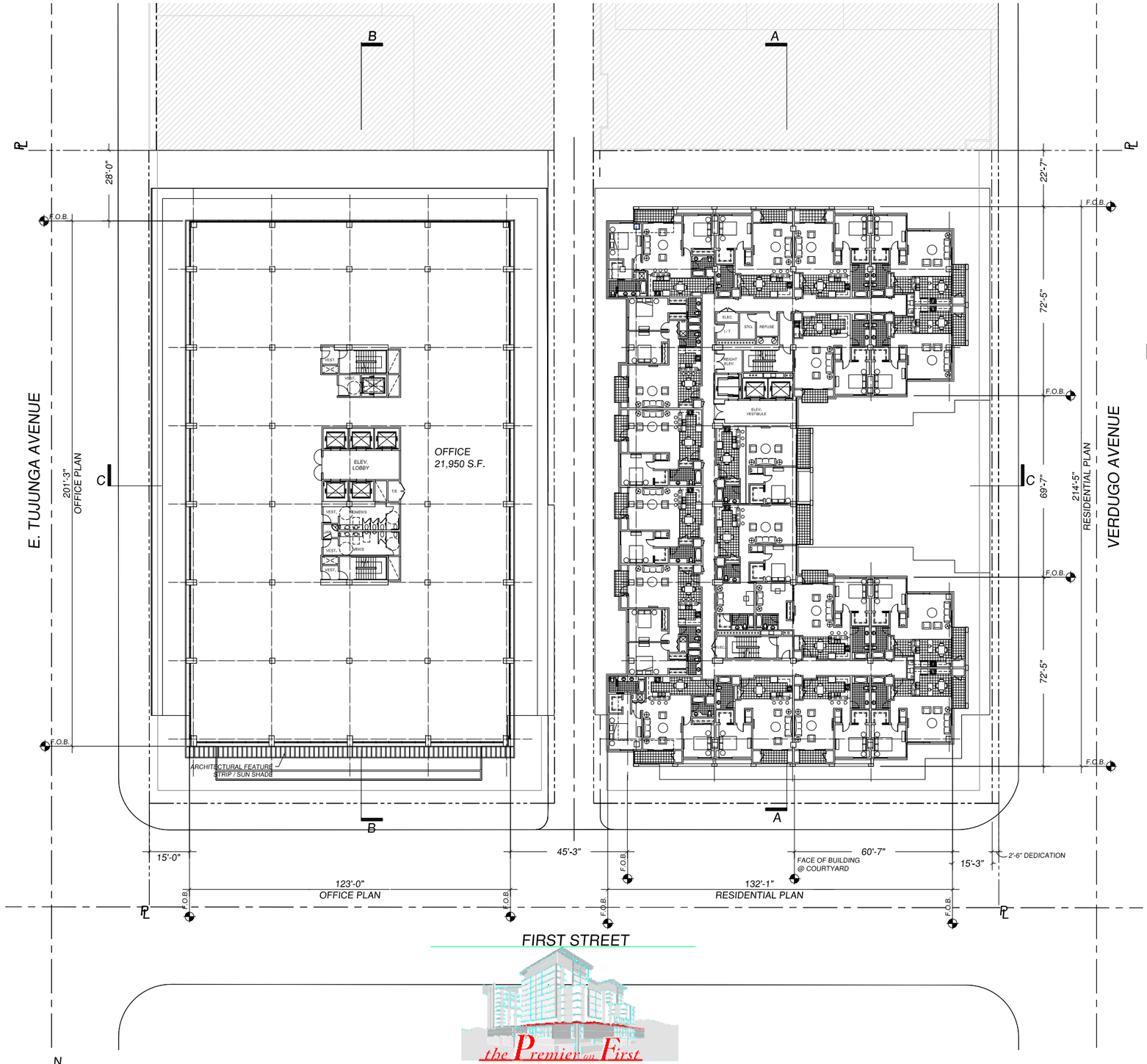

PRIVATE OPEN SPACE

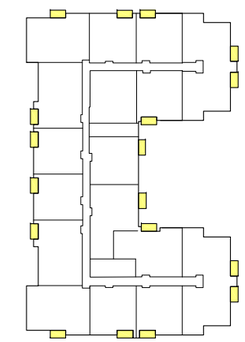

LEVELS 2 - 5 PRIVATE OPEN SPACE: 3,600 SF
72 UNITS / 3,600 SF = 50 SF PER UNIT

OFFICE SPACE

PODIUM LEVEL 1	21,758 SF
SUBTOTAL	21,758 SF
2ND-5TH LEVELS	
(*SF. PER LEVEL)	*21,950 SF
SUBTOTAL	87,800 SF
6TH LEVEL	16,151 SF
SUBTOTAL	16,151 SF
7TH-8TH LEVELS	
(*SF. PER LEVEL)	*16,151 SF
SUBTOTAL	32,302 SF
TOTAL	158,011 SF

RESIDENTIAL UNITS

PODIUM LEVEL (18 UNITS)	area	number
1 BEDRM	(830sf - 880sf)	12
2 BEDRM	(1,140sf - 1,150sf)	4
TOTAL		16
TYPICAL LEVEL (2ND - 5TH) (18 UNITS / LEVEL)		
1 BEDRM	(830sf - 880sf)	48
1 BEDRM + OFFICE	(1,100sf -1,150sf)	8
2 BEDRM	(1,140sf -1,150sf)	16
TOTAL		72
6TH LEVEL	(14 UNITS)	
1 BEDRM	(830sf - 880sf)	8
1 BEDRM + OFFICE	(1,100sf -1,150sf)	2
2 BEDRM	(1,140sf -1,150sf)	4
TOTAL		14
7TH - 9TH LEVEL	(14 UNITS / LEVEL)	
1 BEDRM	(830sf - 880sf)	24
1 BEDRM + OFFICE	(1,100sf -1,150sf)	6
2 BEDRM	(1,140sf -1,150sf)	12
TOTAL		42
PENTHOUSE LEVEL		
1 - LOFT BEDRM	(1,702sf)	2
1 - LOFT BEDRM + OFFICE	(1,800sf -1,860sf)	2
2 BEDRM + LOFT BEDRM	(2,690sf - 3,060sf)	4
2 BEDRM + LOFT OFFICE	(2,125sf)	2
TOTAL		10
GRAND TOTAL		154

DCA
DANIEL CHUDNOVSKY, A.I.A. ARCHITECTS, INC.

2566 S. OVERLAND AVENUE, SUITE 640, LOS ANGELES, CA 90064
DCAARCHITECT.COM
COPYRIGHT © 2016

N

* OFFICE • 2nd-3rd • 2nd-5th LEVELS • RESIDENTIAL

A-10 DESIGN REVIEW SUBMITTAL 01/06/17 A-10

0 10 20 40 80

CUSUMANO REAL ESTATE GROUP

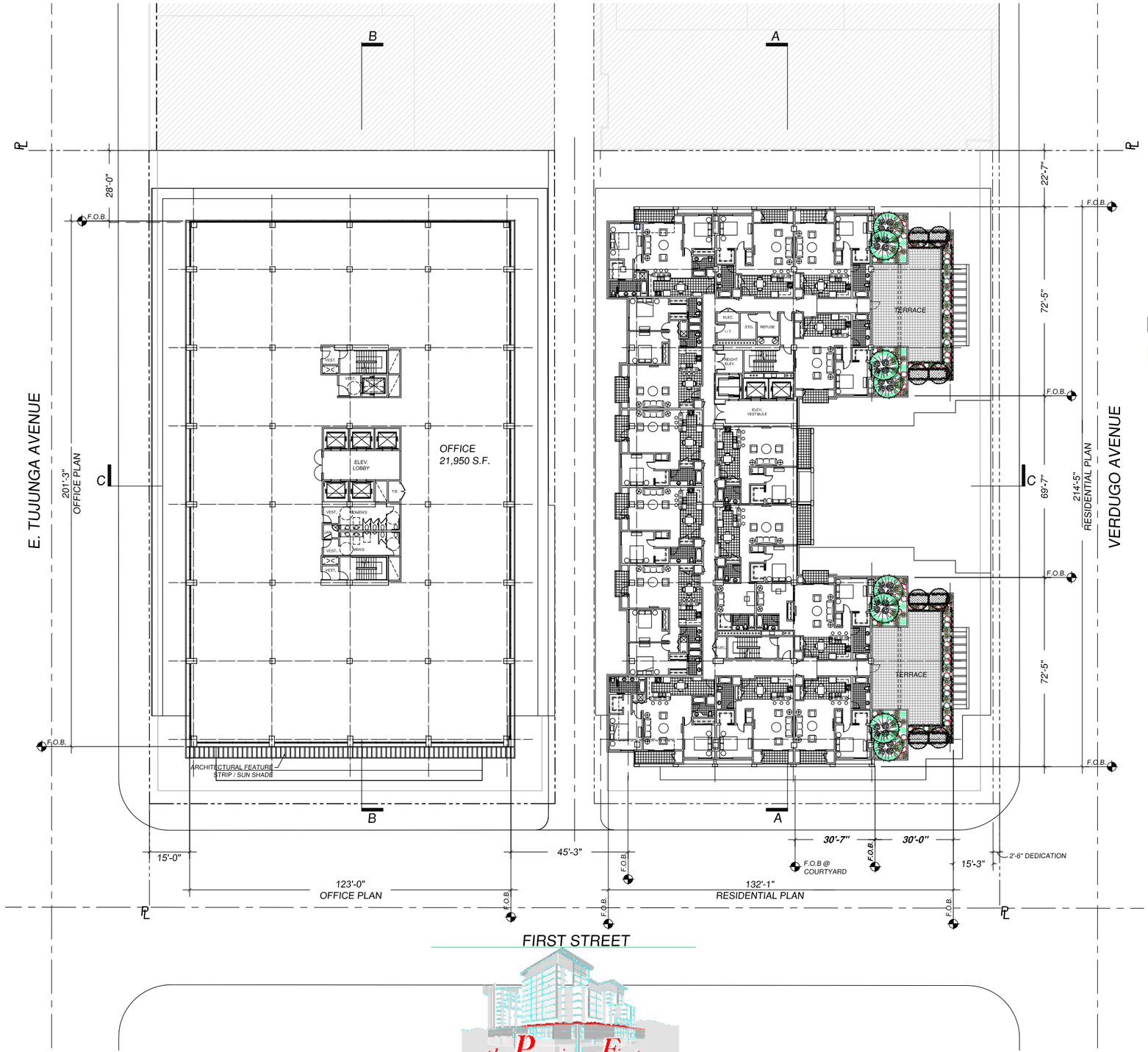

OFFICE SPACE

PODIUM LEVEL 1	21,758 SF
SUBTOTAL	21,758 SF
2ND-5TH LEVELS	
(*SF. PER LEVEL)	*21,950 SF
SUBTOTAL	87,800 SF
6TH LEVEL	16,151 SF
SUBTOTAL	16,151 SF
7TH-8TH LEVELS	
(*SF. PER LEVEL)	*16,151 SF
SUBTOTAL	32,302 SF
TOTAL	158,011 SF

PRIVATE & COMMON AREA OPEN SPACE

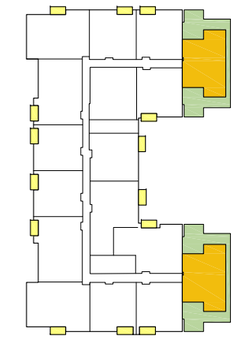

PRIVATE OPEN SPACE: 700 SF
14 UNITS / 700 SF = (50 SF PER UNIT)

ACCESSIBLE COMMON AREA / OPEN SPACE: 4,891 SF *

* LANDSCAPE AREA 36.0%: 1,760 SF

RESIDENTIAL UNITS

PODIUM LEVEL (18 UNITS)	area	number
1 BEDRM	(830sf - 880sf)	12
2 BEDRM	(1,140sf - 1,150sf)	4
TOTAL		16

TYPICAL LEVEL (2ND - 5TH) (18 UNITS / LEVEL)		
1 BEDRM	(830sf - 880sf)	48
1 BEDRM + OFFICE	(1,100sf -1,150sf)	8
2 BEDRM	(1,140sf -1,150sf)	16
TOTAL		72

6TH LEVEL (14 UNITS)		
1 BEDRM	(830sf - 880sf)	8
1 BEDRM + OFFICE	(1,100sf -1,150sf)	2
2 BEDRM	(1,140sf -1,150sf)	4
TOTAL		14

7TH - 9TH LEVEL (14 UNITS / LEVEL)		
1 BEDRM	(830sf - 880sf)	24
1 BEDRM + OFFICE	(1,100sf -1,150sf)	6
2 BEDRM	(1,140sf -1,150sf)	12
TOTAL		42

PENTHOUSE LEVEL		
1 - LOFT BEDRM	(1,702sf)	2
1 - LOFT BEDRM + OFFICE	(1,800sf -1,860sf)	2
2 BEDRM + LOFT BEDRM	(2,690sf - 3,060sf)	4
2 BEDRM + LOFT OFFICE	(2,125sf)	2
TOTAL		10

GRAND TOTAL	154

DCA
DANIEL CHUDNOVSKY, A.I.A. ARCHITECTS, INC.

2566 S. OVERLAND AVENUE, SUITE 640, LOS ANGELES, CA 90064
DCAARCHITECT.COM
COPYRIGHT © 2016

N

* OFFICE • 4th-5th • 6th LEVELS • RESIDENTIAL

A-11 DESIGN REVIEW SUBMITTAL 01/06/17 A-11

0 10 20 40 80

CUSUMANO REAL ESTATE GROUP

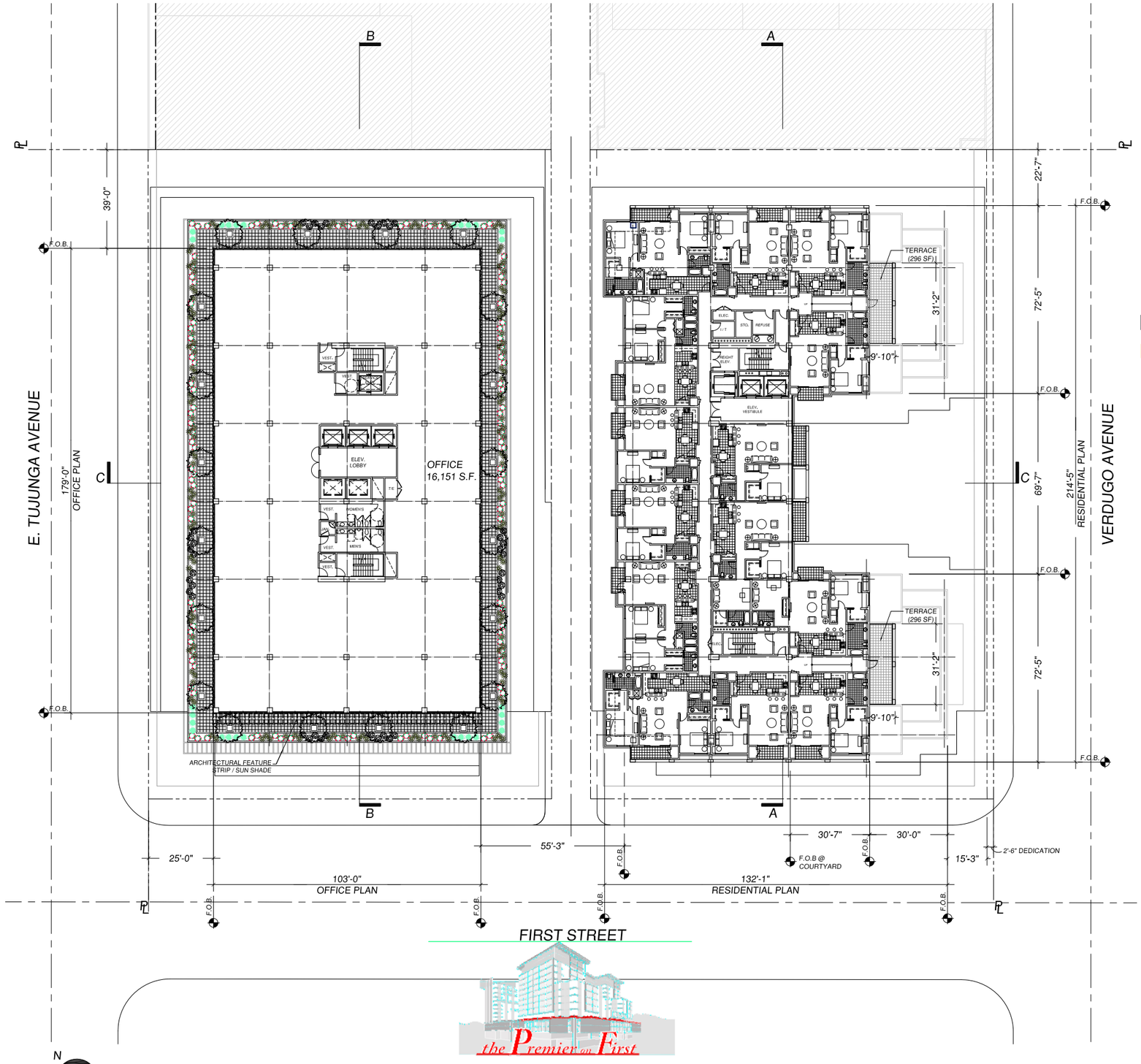

PRIVATE & COMMON AREA OPEN SPACE

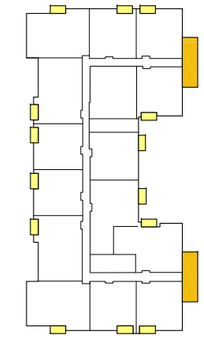

LEVELS 7 - 9 PRIVATE OPEN SPACE: 42 UNITS / 2,100 SF =	2,100 SF (50 SF PER UNIT)
LEVEL 7-9 COMMON OPEN SPACE: 3 LEVELS / 1,776 SF =	1,776 SF (592 SF PER LEVEL)

RESIDENTIAL UNITS

PODIUM LEVEL (18 UNITS)	area	number
1 BEDRM	(830sf - 880sf)	12
2 BEDRM	(1,140sf - 1,150sf)	4
TOTAL		16

TYPICAL LEVEL (2ND - 5TH) (18 UNITS / LEVEL)		
1 BEDRM	(830sf - 880sf)	48
1 BEDRM + OFFICE	(1,100sf -1,150sf)	8
2 BEDRM	(1,140sf -1,150sf)	16
TOTAL		72

6TH LEVEL (14 UNITS)		
1 BEDRM	(830sf - 880sf)	8
1 BEDRM + OFFICE	(1,100sf -1,150sf)	2
2 BEDRM	(1,140sf -1,150sf)	4
TOTAL		14

7TH - 9TH LEVEL (14 UNITS / LEVEL)		
1 BEDRM	(830sf - 880sf)	24
1 BEDRM + OFFICE	(1,100sf -1,150sf)	6
2 BEDRM	(1,140sf -1,150sf)	12
TOTAL		42

PENTHOUSE LEVEL		
1 - LOFT BEDRM	(1,702sf)	2
1 - LOFT BEDRM + OFFICE	(1,800sf -1,860sf)	2
2 BEDRM + LOFT BEDRM	(2,690sf - 3,060sf)	4
2 BEDRM + LOFT OFFICE	(2,125sf)	2
TOTAL		10

GRAND TOTAL	154

OFFICE SPACE

PODIUM LEVEL 1	21,758 SF
SUBTOTAL	21,758 SF
2ND-5TH LEVELS	
(*SF. PER LEVEL)	*21,950 SF
SUBTOTAL	87,800 SF
6TH LEVEL	16,151 SF
SUBTOTAL	16,151 SF
7TH-8TH LEVELS	
(*SF. PER LEVEL)	*16,151 SF
SUBTOTAL	32,302 SF
TOTAL	158,011 SF

DCA
DANIEL CHUDNOVSKY, A.I.A. ARCHITECTS, INC.
2566 S. OVERLAND AVENUE, SUITE 640, LOS ANGELES, CA 90064
DCAARCHITECT.COM
COPYRIGHT © 2016

the Premier on First

CUSUMANO REAL ESTATE GROUP

* OFFICE • 6th • 7th LEVEL (8th, 9th Sim.) • RESIDENTIAL

A-12 DESIGN REVIEW SUBMITTAL 01/06/17 A-12

0 10 20 40 80

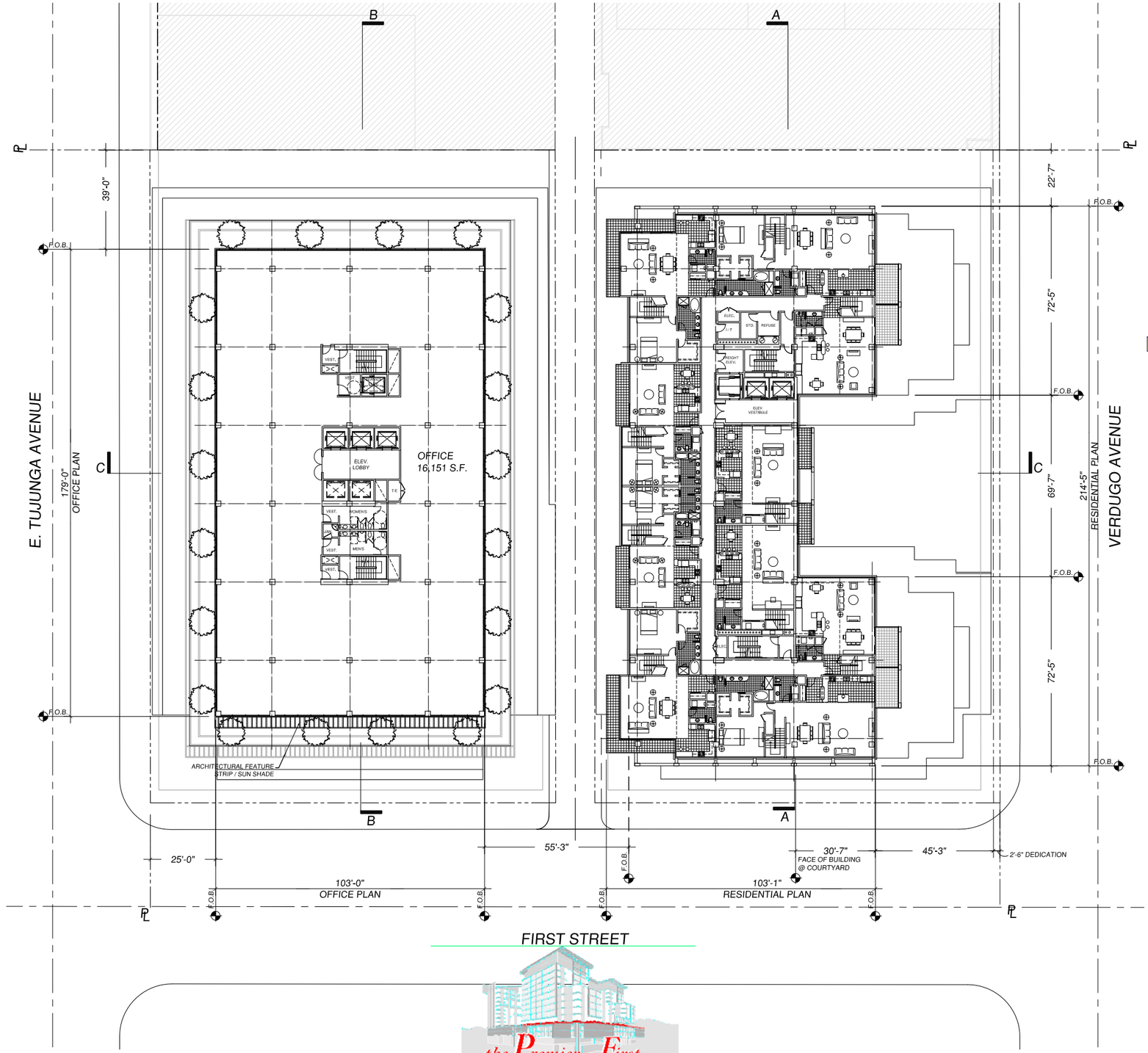

PRIVATE OPEN SPACE

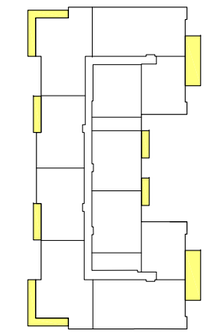

PENTHOUSE + LOFT LEVEL PRIVATE OPEN SPACES: 1,797 SF
10 UNITS / 1,797 SF = 180 SF / UNIT

OFFICE SPACE

PODIUM LEVEL 1	21,758 SF
SUBTOTAL	21,758 SF
2ND-5TH LEVELS	
(*SF. PER LEVEL)	*21,950 SF
SUBTOTAL	87,800 SF
6TH LEVEL	16,151 SF
SUBTOTAL	16,151 SF
7TH-8TH LEVELS	
(*SF. PER LEVEL)	*16,151 SF
SUBTOTAL	32,302 SF
TOTAL	158,011 SF

RESIDENTIAL UNITS

PODIUM LEVEL (18 UNITS)	area	number
1 BEDRM	(830sf - 880sf)	12
2 BEDRM	(1,140sf - 1,150sf)	4
TOTAL		16

TYPICAL LEVEL (2ND - 5TH) (18 UNITS / LEVEL)		
1 BEDRM	(830sf - 880sf)	48
1 BEDRM + OFFICE	(1,100sf -1,150sf)	8
2 BEDRM	(1,140sf -1,150sf)	16
TOTAL		72

6TH LEVEL (14 UNITS)		
1 BEDRM	(830sf - 880sf)	8
1 BEDRM + OFFICE	(1,100sf -1,150sf)	2
2 BEDRM	(1,140sf -1,150sf)	4
TOTAL		14

7TH - 9TH LEVEL (14 UNITS / LEVEL)		
1 BEDRM	(830sf - 880sf)	24
1 BEDRM + OFFICE	(1,100sf -1,150sf)	6
2 BEDRM	(1,140sf -1,150sf)	12
TOTAL		42

PENTHOUSE LEVEL		
1 - LOFT BEDRM	(1,702sf)	2
1 - LOFT BEDRM + OFFICE	(1,800sf -1,860sf)	2
2 BEDRM + LOFT BEDRM	(2,690sf - 3,060sf)	4
2 BEDRM + LOFT OFFICE	(2,125sf)	2
TOTAL		10
GRAND TOTAL		154

DCA
DANIEL CHUDNOVSKY, A.I.A. ARCHITECTS, INC.
2566 S. OVERLAND AVENUE, SUITE 640, LOS ANGELES, CA 90064
DCAARCHITECT.COM
COPYRIGHT © 2016

* OFFICE • 7th LEVEL • PENTHOUSE (10th) • RESIDENTIAL

A-13 DESIGN REVIEW SUBMITTAL 01/06/17 A-13

0 10 20 40 80

CUSUMANO REAL ESTATE GROUP

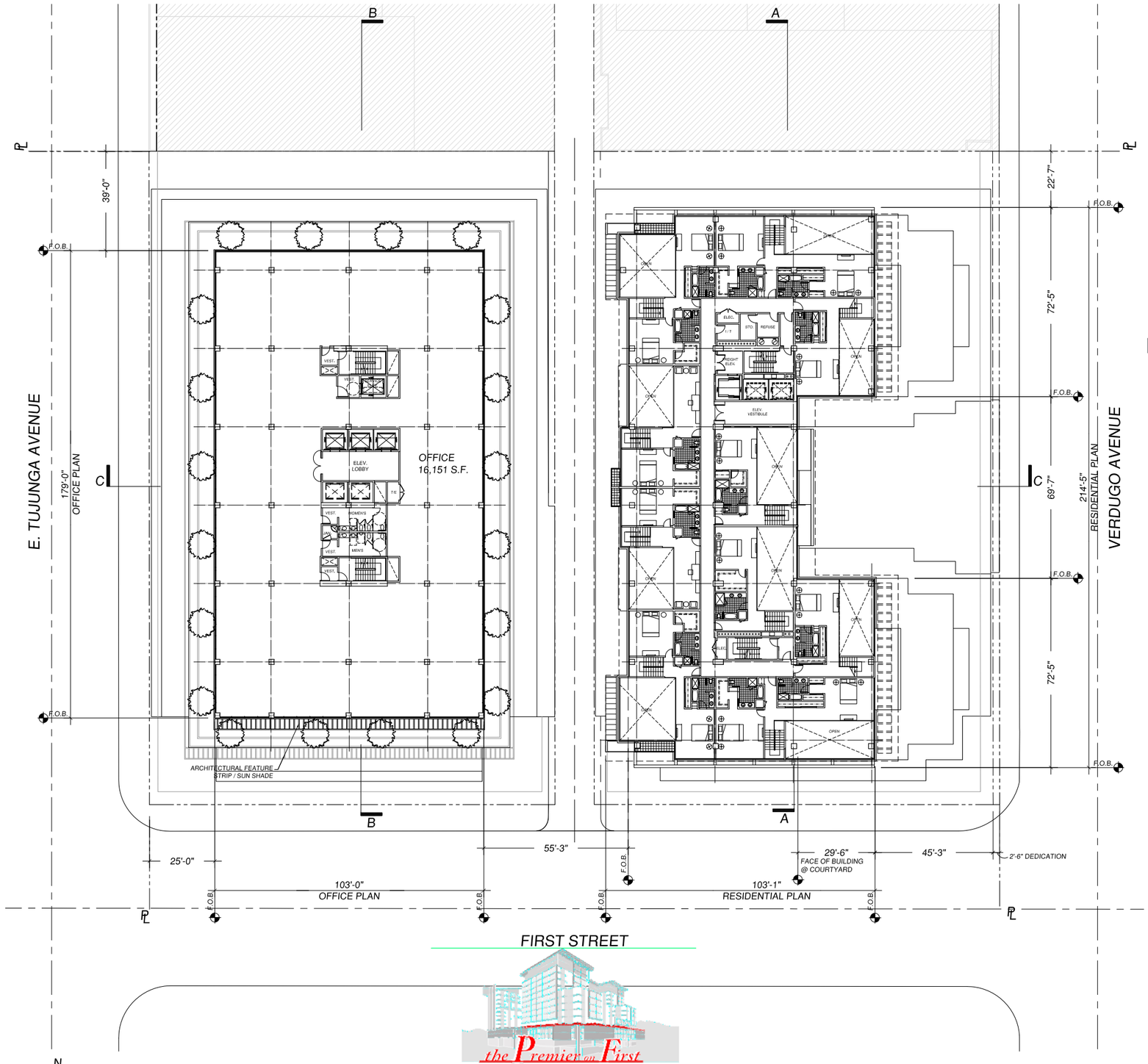

PRIVATE OPEN SPACE

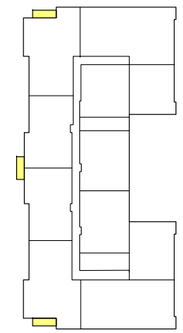

PENTHOUSE + LOFT LEVEL PRIVATE OPEN SPACES: 1,797 SF
10 UNITS / 1,797 SF = 180 SF / UNIT

RESIDENTIAL UNITS

PODIUM LEVEL (18 UNITS)	area	number
1 BEDRM	(830sf - 880sf)	12
2 BEDRM	(1,140sf - 1,150sf)	4
TOTAL		16

TYPICAL LEVEL (2ND - 5TH) (18 UNITS / LEVEL)		
1 BEDRM	(830sf - 880sf)	48
1 BEDRM + OFFICE	(1,100sf -1,150sf)	8
2 BEDRM	(1,140sf -1,150sf)	16
TOTAL		72

6TH LEVEL (14 UNITS)		
1 BEDRM	(830sf - 880sf)	8
1 BEDRM + OFFICE	(1,100sf -1,150sf)	2
2 BEDRM	(1,140sf -1,150sf)	4
TOTAL		14

7TH - 9TH LEVEL (14 UNITS / LEVEL)		
1 BEDRM	(830sf - 880sf)	24
1 BEDRM + OFFICE	(1,100sf -1,150sf)	6
2 BEDRM	(1,140sf -1,150sf)	12
TOTAL		42

PENTHOUSE LEVEL		
1 - LOFT BEDRM	(1,702sf)	2
1 - LOFT BEDRM + OFFICE	(1,800sf -1,860sf)	2
2 BEDRM + LOFT BEDRM	(2,690sf - 3,060sf)	4
2 BEDRM + LOFT OFFICE	(2,125sf)	2
TOTAL		10

GRAND TOTAL	154

OFFICE SPACE

PODIUM LEVEL 1	21,758 SF
SUBTOTAL	21,758 SF
2ND-5TH LEVELS	
(*SF. PER LEVEL)	*21,950 SF
SUBTOTAL	87,800 SF
6TH LEVEL	16,151 SF
SUBTOTAL	16,151 SF
7TH-8TH LEVELS	
(*SF. PER LEVEL)	*16,151 SF
SUBTOTAL	32,302 SF
TOTAL	158,011 SF

the Premier on First

N

* OFFICE • 8th LEVEL • PENTHOUSE (LOFT) • RESIDENTIAL

A-14 DESIGN REVIEW SUBMITTAL 01/06/17 A-14

0 10 20 40 80

DCA
DANIEL CHUDNOVSKY, A.I.A. ARCHITECTS, INC.
2566 S. OVERLAND AVENUE, SUITE 640, LOS ANGELES, CA 90064
DCAARCHITECT.COM
COPYRIGHT © 2016

CUSUMANO REAL ESTATE GROUP

AVERAGE SETBACKS

	HEIGHT	1ST ST.	TUJUNGA AVE.
GROUND	0 - 15'	21'-3"	24'-8"
PARKING +1 & +2	15' - 39'	21'-3"	13'-2"
PODIUM	39' - 51.5'	23'-10"	15'-0"
2-3rd LEVELS	51.5' - 76.5'	22'-6"	15'-0"
4-5th LEVELS	76.5' - 101.5'	33'-2"	25'-0"
6th LEVEL	101.5' - 114'	33'-2"	25'-0"
7th LEVEL	114' - 126.5'	33'-2"	25'-0"
8th LEVEL	126.5' - 139'	33'-2"	25'-0"

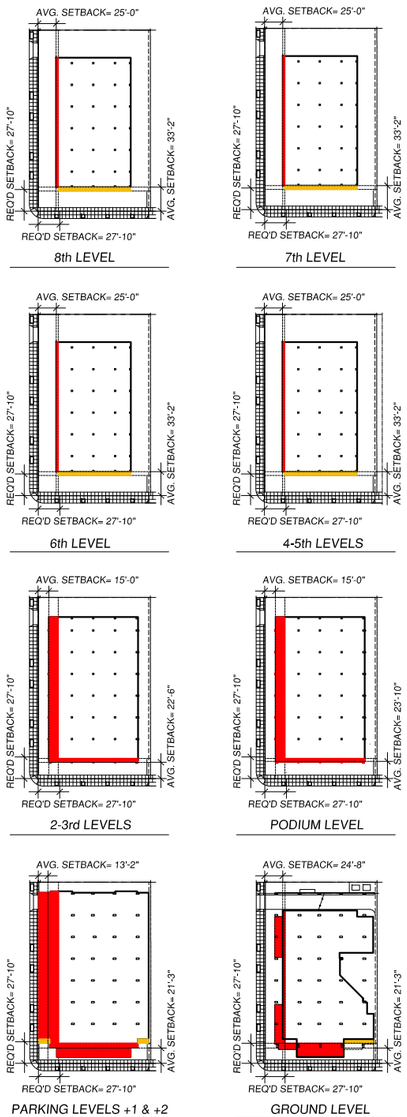

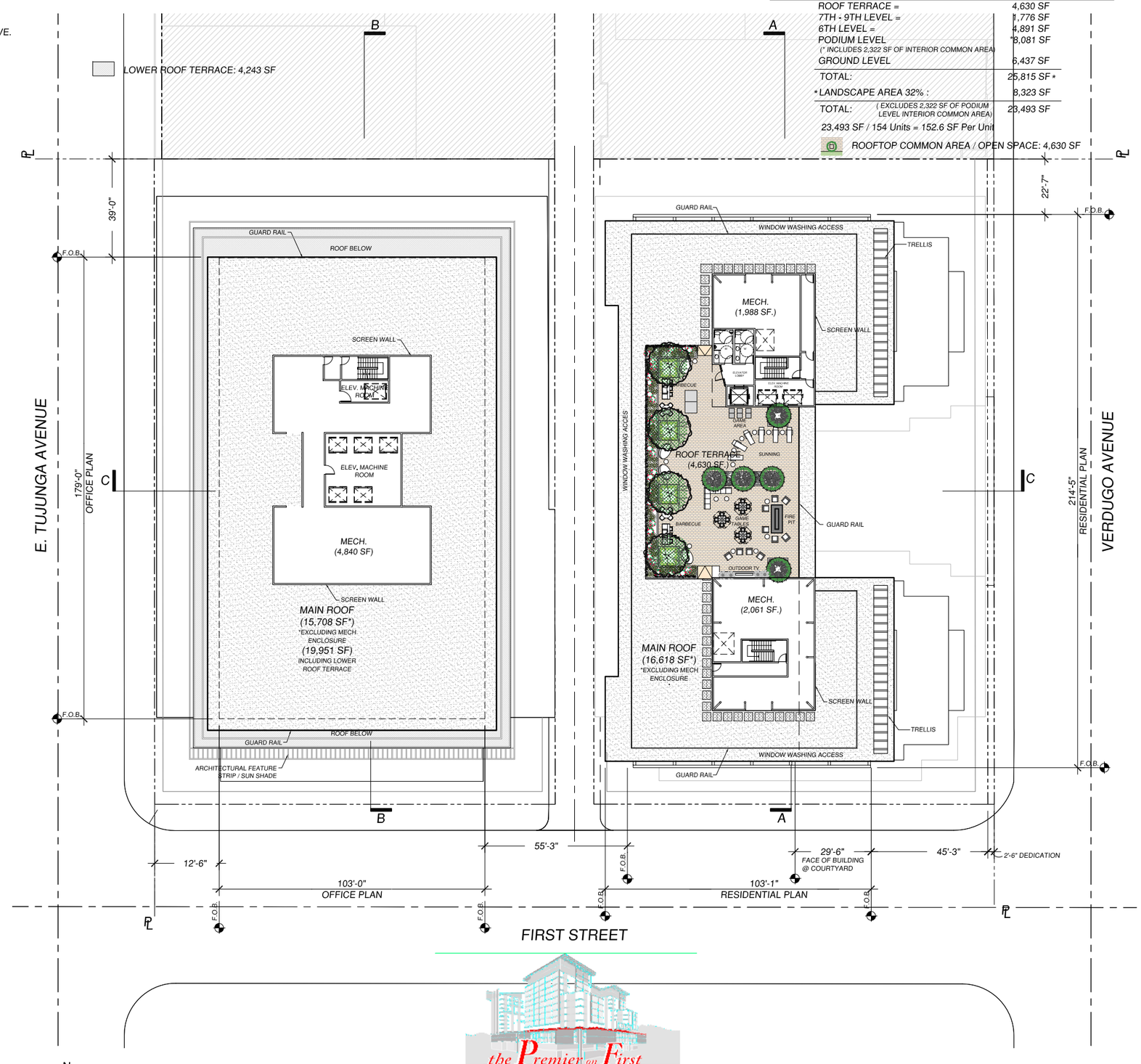

ACCESSIBLE COMMON AREA / OPEN SPACE

ROOF TERRACE =	4,630 SF
7TH - 9TH LEVEL =	1,776 SF
6TH LEVEL =	4,891 SF
PODIUM LEVEL (* INCLUDES 2,322 SF OF INTERIOR COMMON AREA)	*8,081 SF
GROUND LEVEL	6,437 SF
TOTAL:	25,815 SF *
* LANDSCAPE AREA 32% :	8,323 SF
TOTAL: (EXCLUDES 2,322 SF OF PODIUM LEVEL INTERIOR COMMON AREA)	23,493 SF

23,493 SF / 154 Units = 152.6 SF Per Unit

ROOFTOP COMMON AREA / OPEN SPACE: 4,630 SF

AVERAGE SETBACKS

	HEIGHT	1ST ST.	TUJUNGA AVE.
GROUND	0 - 20'	25'-1"	54'-5"
PARKING +1 & +2	20' - 44'	21'-6"	15'-8"
PODIUM	44' - 54'	19'-2"	44'-9"
2-5th LEVELS	54' - 84'	20'-2"	45'-5"
6th LEVEL	84' - 94'	17'-8"	62'-3"
7th- 9th LEVELS	94' - 134'	17'-8"	62'-3"
PENTHOUSE	134' - 154'	20'-8"	62'-3"

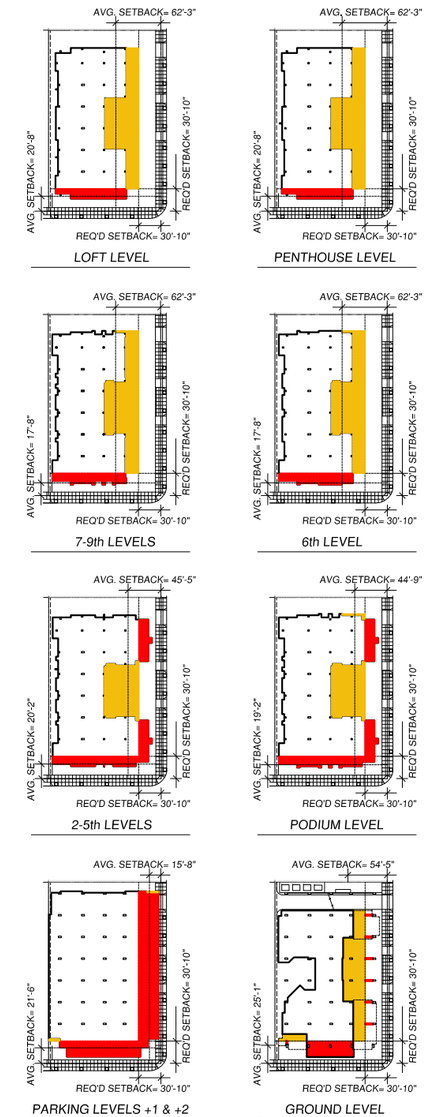

DCA
DANIEL CHUDNOVSKY, A.I.A. ARCHITECTS, INC.
2566 S. OVERLAND AVENUE, SUITE 640, LOS ANGELES, CA 90064
DCAARCHITECT.COM

COPYRIGHT © 2016

N

the Premier on First

* OFFICE • ROOF - ROOF TERRACE • RESIDENTIAL

A-15 DESIGN REVIEW SUBMITTAL 01/06/17 A-15

0 10 20 40 80

CUSUMANO REAL ESTATE GROUP